WHITE

OWNER'S OPERATING AND MAINTENANCE MANUAL

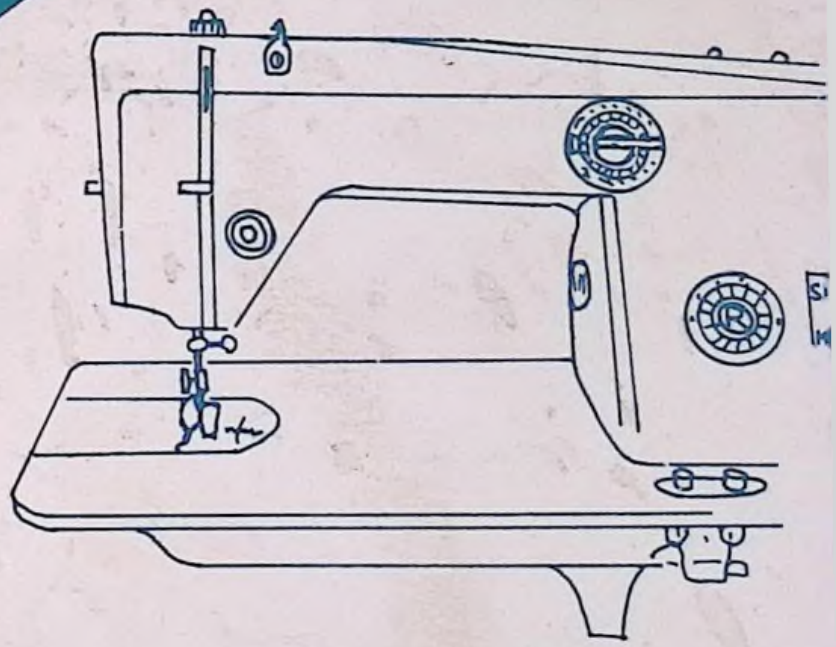

MODEL 455

You are now the owner of a new zigzag sewing machine, the most versatile type of its kind you can possess.

Buttonholes, monogramming, overcasting and creative embroidery are done with ease and speed.

To aid you in obtaining the greatest performance from your new WHITE this book on its care and use has been written for you. Read the instructions carefully as a thorough understanding of your machine will reward you with many hours of trouble free, creative sewing.

Time-saving attachments such as rufflers, binders, edgestitchers, cording feet and others to complement the accessories furnished with your WHITE are available from the store where you purchased your machine.

WHITE SEWING MACHINE COMPANY

Cleveland, Ohio 44111

WHITE CONSOLIDATED INDUSTRIES, LTD.

Toronto, Ontario, Canada

WARRANTY WHITE sewing machines CERTIFICATE

WE WARRANT to the original purchaser of this new White Sewing Machine (serial number entered on reverse side) that it is built of first class materials and workmanship. Should any part of this sewing mechanism (excepting needles, pulleys, belts, attachments or electrical equipment) be found defective within twenty (20) years from date of purchase, it will be exchanged for a new part, providing only that the machine is used under normal household conditions and not damaged by tinkering, fire, water or accident.

ELECTRICAL EQUIPMENT is warranted in accordance with the standard practices covering household electrical equipment and appliances, i.e., the exchange of any defective electrical part (excepting lamp bulbs) for a period of one year from date of original purchase.

THIS WARRANTY is valid only if signed by an authorized White Sewing Machine dealer after the serial number of the machine and date of purchase have been entered in the spaces provided.

This warranty is in lieu of any other warranties, express or implied, and the obligation under this warranty shall not include any liability for direct, indirect or consequential damages.

WHITE SEWING MACHINE COMPANY
CLEVELAND, OHIO
WHITE CONSOLIDATED INDUSTRIES LTD
TORONTO CANADA

If purchased in Canada, send this to

PLACE POSTAGE HERE

WHITE CONSOLIDATED INDUSTRIES, LTD.
1470 BIRCHMOUNT ROAD
SCARBOROUGH, ONTARIO, CANADA

WARRANTY WHITE sewing machines SINCE 1876 REGISTRATION

Please register the following listed White Sewing Machine under the terms of your warranty. I understand this warranty becomes effective from the date of purchase as shown below.

MODEL NUMBER 455		SERIAL NUMBER	
PURCHASED FROM			DATE OF PURCHASE
DID YOU TRADE IN A MACHINE?	WHAT MAKE?		HOW OLD WAS IT?
PURCHASERS NAME			
ADDRESS			
CITY			

RETURN THIS CARD

WARRANTY WHITE sewing machines SINCE 1876 REGISTRATION

Please register the following listed White Sewing Machine under the terms of your warranty. I understand this warranty becomes effective from the date of purchase as shown below.

MODEL NUMBER 455		SERIAL NUMBER	
PURCHASED FROM			DATE OF PURCHASE
DID YOU TRADE IN A MACHINE?	WHAT MAKE?		HOW OLD WAS IT?
PURCHASERS NAME			
ADDRESS			
CITY			

RETURN THIS CARD

Warranty Certificate and Registration for

WHITE sewing machines SINCE 1876

NAME OF ORIGINAL PURCHASER			DATE OF PURCHASE
MODEL NUMBER 455		SERIAL NUMBER	
AUTHORIZED DEALER SIGNATURE			

SERVICE POLICY

DATE OF PURCHASE _____ BRAND _____

COMPLETE MODEL NO. 455 SERIAL NO. _____

Expert service for the sewing machine described above is available by the undersigned dealer.

Standard charges for service at store, if machine is brought in, are considerably less than home calls.

Service without charge for _____ days from date written above, and on dealer record, is due original purchaser if required.

DEALER _____

CITY and STATE _____

SIGNED _____ TITLE _____

THIS PORTION TO BE RETAINED BY CUSTOMER

DEALER RECORD

DATE SOLD _____ BRAND _____

COMPLETE MODEL NO. 455 SERIAL NO. _____

SOLD TO _____

ADDRESS _____

ENTITLED TO FREE SERVICE FOR _____ DAYS.

INDEX

Pages

Accessories 19
- How to Use 20
- Hemmers 34 35
- Seam Gauge or Cloth Guide 22
- Quilting Guide 22

Attachments 30
- Adjustable Cord and Zipper Foot 36
- Attachment Foot 31
- Binder 33
- Edgestitcher 30
- Hemmers 31
- Ruffler 38

Bobbin
- Placing in Shuttle 7
- Threading 6
- Winding 5

Buttonholes 16
- Bound 43

Buttons Sew-On 17

Charts
- Needle-Thread-Fabric-Stitching 4

Pages

- Stitch Length 9
- Trouble 26 27 28

Darning and Mending 11

Embroidery
- Creative 14
- Hoop 15

Features and Parts (Front View) 2
(Back View) 3

Installation-Head in Cabinet 46
Head in Portable Case 44

Maintenance and Care 23
- Cleaning and Oiling the Shuttle 24

Needle Setting 6

Pressure and Feeding of Fabric 11
- Thin and Light weight Fabrics 11

Reverse Sewing 9

Sewing Preparation 12

Sewing Tips 40 41 42

Straight Stitching 13

Stretch Stitching 18

Tension Adjustment 10

Threading-Upper 8

FEATURES AND PARTS

(Front View)

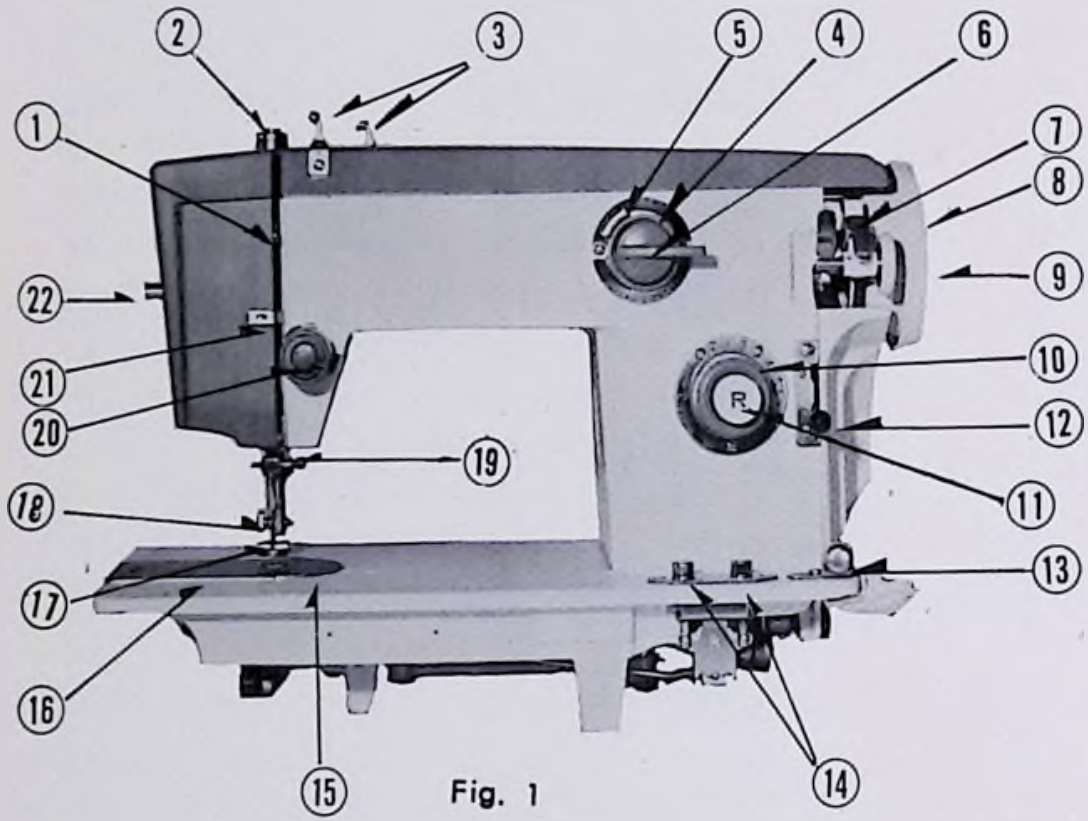

Fig. 1

1. Take up
2. Pressure release (darning)
3. Arm thread guides
4. Zigzag Stitch Width Dial
5. Zigzag stitch width lock
6. Stitch Width Control Knob
7. Bobbin winder
8. Hand wheel
9. Clutch nut
10. Stitch length control
11. Reverse button
12. Stretch Stitch Control
13. Bobbin winder tension
14. Drop feed buttons
15. Needle plate
16. Cover plate
17. Presser foot
18. Presser foot clamp screw
19. Needle clamp
20. Tension
21. Thread box and face latch
22. Light

FEATURES AND PARTS

(Back View)

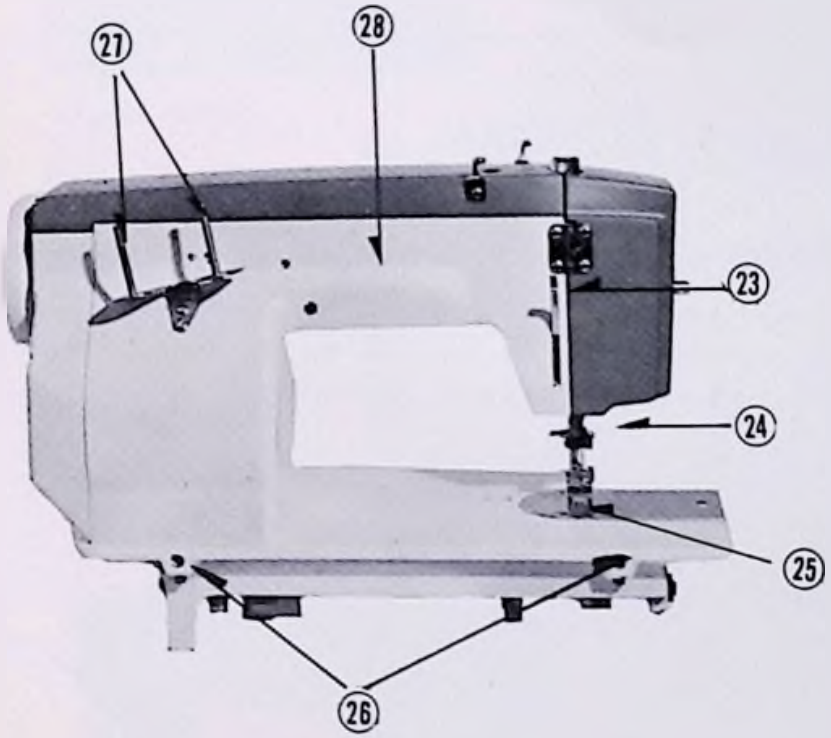

Fig. 2

23. Presser Bar Lifter
24. Thread Cutter
25. Feed
26. Head Hinge Mounting Holes
27. Spool Pins
28. Handle

NEEDLE-THREAD-FABRIC-STITCHING GUIDE

Fabric	Needle No.	Machine Stitches Per Inch	Cotton Thread	Mercerized Thread	Silk or Nylon
Extremely heavy tarpaulin, sacking, canvas, duck, etc.	4	6 to 8	10 to 30	Heavy Duty	
Heavy upholstery fabric, ticking, denim, leatherette	3 (18)	8 to 10	30 to 40	Heavy Duty	
Medium heavy drapery fabric, velveteen, suiting, felt, terry, etc.	2 (16)	10 to 12	40 to 60	Heavy Duty	
Medium broadcloth, percale, gingham, linen, chintz, taffeta, sheer wool, shantung, etc.	1 (14)	12 to 14	60 to 80	50	A
Sheer voile, lawn, dimity, crepe, handkerchief linen, plastic film, etc.	0 (11)	14 to 16 (Plastic film) 8 to 10	80 to 100	50	A
Very sheer chiffon, batiste, lace, organdy, ninon, net, marquisett, etc.	00	16 to 20	100 to 150	50	A

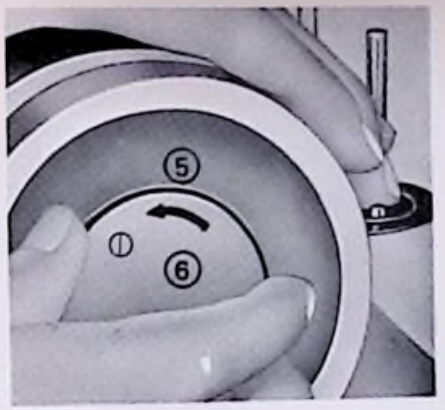

Fig. 3

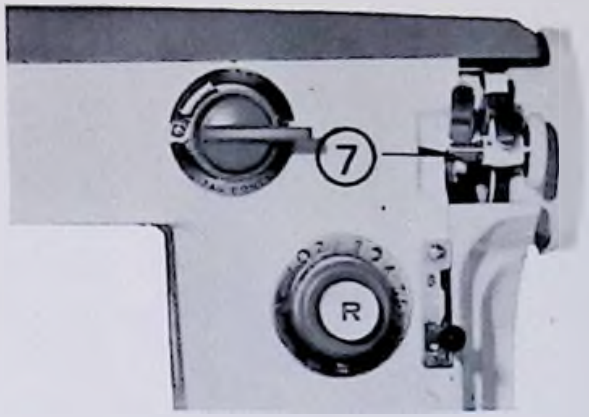

Fig. 4

WINDING THE BOBBIN

Disengage hand wheel (5, Fig. 3), from the stitching mechanism by turning clutch (6, Fig.3) toward you or counter clockwise.

Place a spool of thread on one of the spool pins. Lead thread through the upper thread guide on arm and down through tension disc (9, Fig. 5,) at base of machine. Run end of thread through a hole in bobbin edge (left flange and from inside out) and place bobbin B. on spindle of bobbin winder (7, Fig. 4,) fitting the notch bobbin over small pin on spindle. Push bobbin winder against hand wheel. Hold thread end loosely and start machine slowly.

Bobbin will stop winding when it is filled.

Turn clutch away from you until sewing mechanism is again engaged so that needle moves when you turn the hand wheel.

Break off loose thread end used to start the winding and thread bobbin as stated on Page 6.

Fig. 5

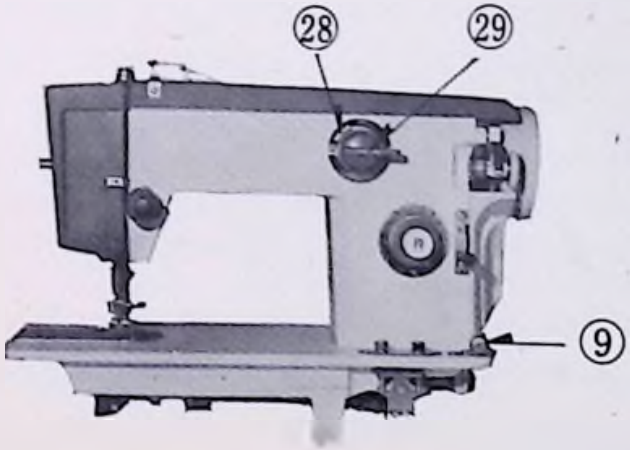

SETTING THE NEEDLE

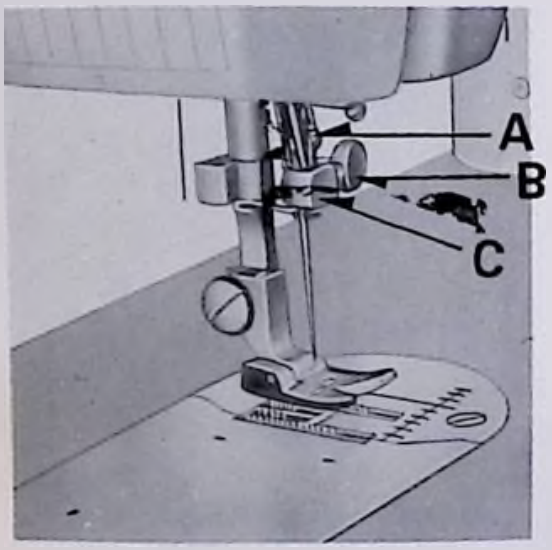

Fig. 6

See Fig. 6. Raise the needle bar to its highest point, turning wheel toward you by hand.

Then loosen the needle clamp screw B and the needle can be inserted into clamp C. Place needle (flat side to right) in the needle clamp and push it upward as far as it will go into the needle clamp hole, tightening the needle clamp screw securely with a screw driver.

After changing the needle make one complete revolution of the balance wheel by hand to be sure the needle is in the correct position.

Fig. 7

THREADING THE BOBBIN CASE

Step 1 (illustrated in Fig. 8). Hold bobbin case between thumb and forefinger of left hand, so that the slot in the edge of the bobbin case is on top. Take the bobbin between thumb and forefinger of right hand so that the thread on top leads from left to right.

Step 2. Insert bobbin into bobbin case, pull the thread into the slot of the bobbin case as shown in Fig. 9, and draw it under tension spring and into the fork-shaped opening of the spring as shown in Fig. 10.

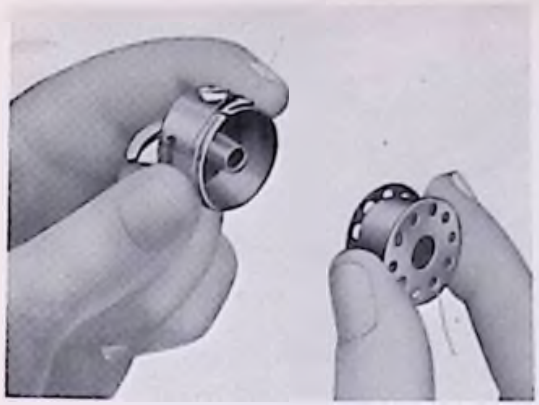

Fig. 8

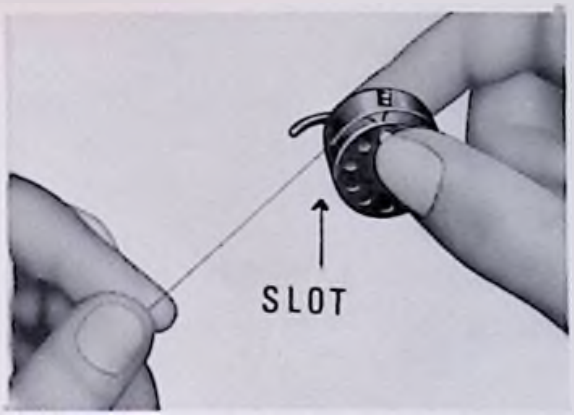

Fig. 9

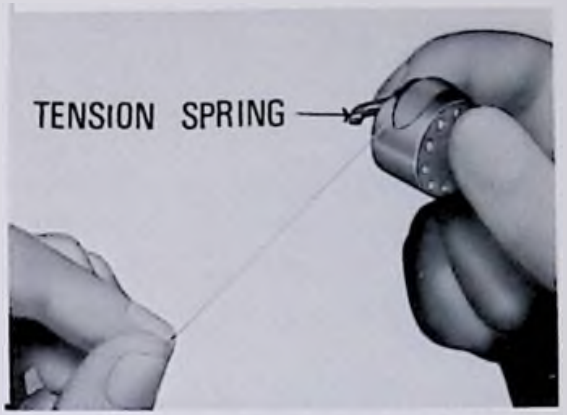

Fig. 10

PLACING BOBBIN CASE IN SHUTTLE

Raise needle bar to highest position, and slide cover plate to the left. (See 17 Fig. 1) Hold the bobbin case latch, (D, Fig. 11) between the thumb and forefinger of the left hand, with at least three inches of thread running from the top of the bobbin case to the right. Insert and center the bobbin case on the stud of the shuttle body, (C). Be sure the bobbin case finger, (E), is opposite the shuttle race notch (A). Press the bobbin case (B) into the shuttle as far as possible until latch catches on the center post of the shuttle. THEN release the bobbin case latch, (D). Press bobbin case again after latch has been released to make sure the bobbin case is locked securely in place. Close the cover plate.

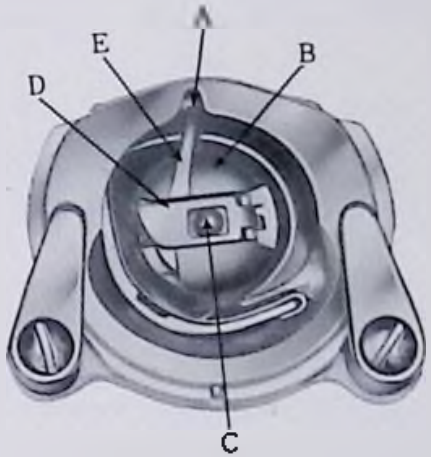

Fig. 11

UPPER THREADING

1. Turn the hand wheel toward you to raise the take-up lever to its highest position.
2. Place a spool of thread on the spool pin.
3. Lead the thread through the upper arm thread guides.
4. Down and between the tension discs, from right to left.
5. Draw the thread up through the check spring and with a slight tug into the hook, (See insert, Fig. 12)
6. Up and through the eye of the take-up lever from right to left.
7. Lead thread down through thread guide 6 and behind the face plate guides and then through the needle bar guide from the back.
8. Thread needle FROM LEFT TO RIGHT, drawing it through about 3 or 4 inches. Hold the end of the upper thread loosely and turn the hand wheel toward you until the needle goes all the way down and comes back up. A loop (Fig. 13) will be formed over the upper thread which then can be pulled out straight. Place both thread ends under the slot of the presser foot and draw toward the back of the machine, leaving both threads three or four inches long.

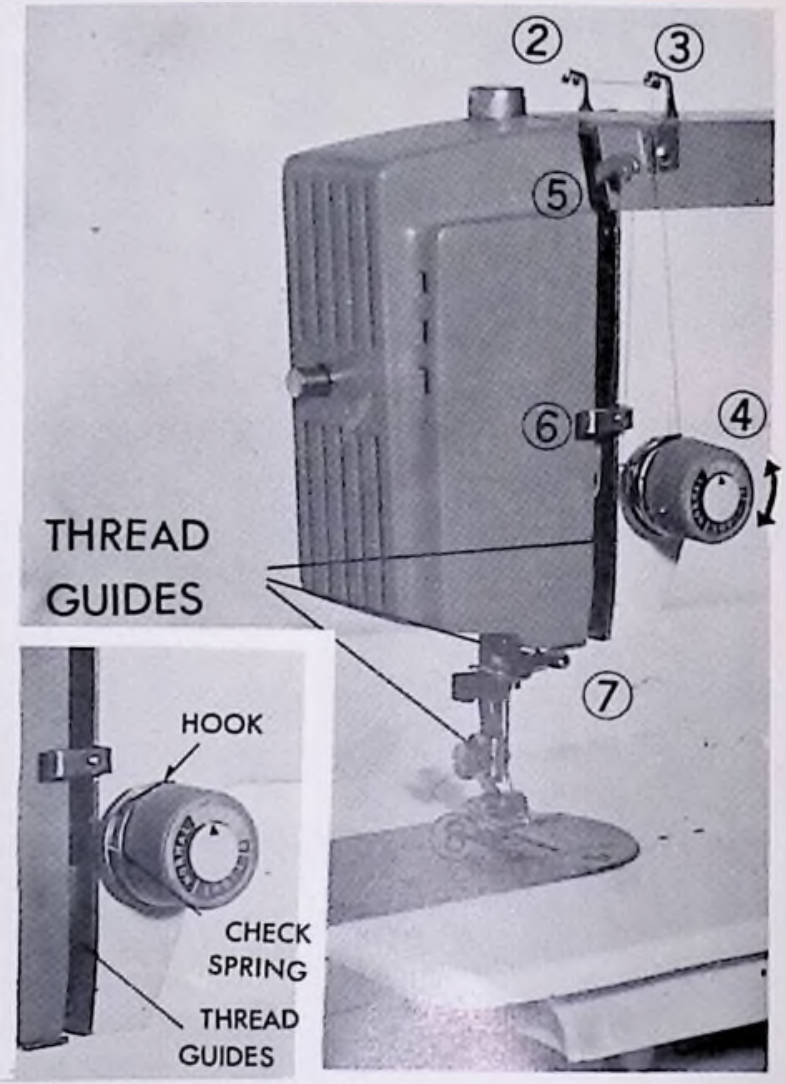

Fig. 12

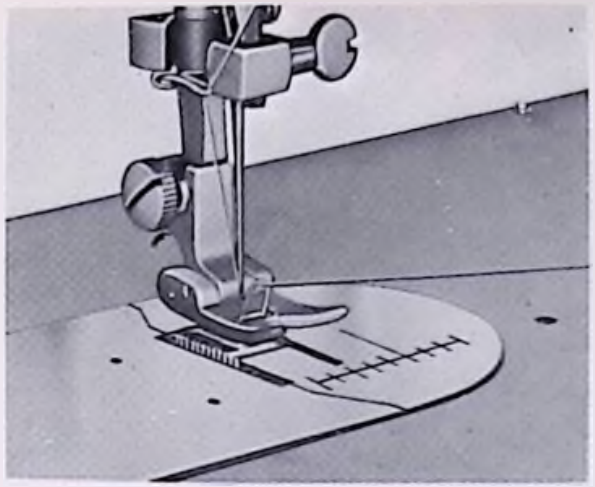

Fig. 13

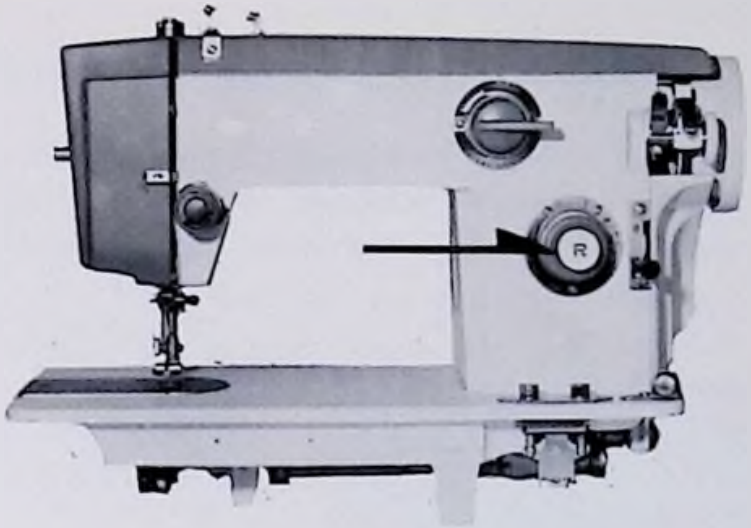

Fig. 14

SETTING THE STITCH LENGTH

The length of the stitch is regulated by the dial, shown in Fig. 14. Near 0 is the shortest stitch and 5 is the longest, but the control may be set at any spot between the markings for a variety of lengths. Turn the dial to the right to lengthen and to the left to shorten the stitch. The number stitch length you choose is indicated by the pointer.

STITCH LENGTH CHART (APPROXIMATE)

Figures on indicator	0	1	2	3	4	5
Number of stitches per inch	No Feeding	30	25	15	8	6

SEWING IN REVERSE

When you wish to sew backward to tie the threads at the beginning or end of a seam, press in the button (**R** Fig. 14) as far as it will go. The machine will sew backward as long as the button is held in.

ADJUSTING THE TENSIONS

Always adjust the upper tension with the presser foot down, as the tension is released when it is raised. To increase the tension on the upper thread, turn dial (Fig. 15) to the right.

To decrease, turn to the left.

Before adjusting lower tension be sure that the machine is threaded properly.

When it is necessary to change the bobbin tension, turn the small screw (Fig. 17) on side of the bobbin case clockwise to tighten, counterclockwise to loosen.

Fig. 15

Fig. 16-A

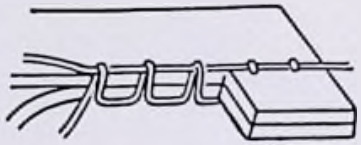

Fig. 16-B

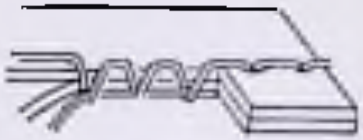

Fig. 16-C

When the upper tensions are properly balanced, a perfect stitch will be formed with both threads interlocking in fabric (Fig. 16-A).

When the upper tension is too tight, the lower thread is pulled up over the upper thread which is lying flat on the fabric (Fig. 16-B)

When the upper tension is too loose, the upper thread forms loops over the lower thread lying flat on the fabric (Fig. 16-C).

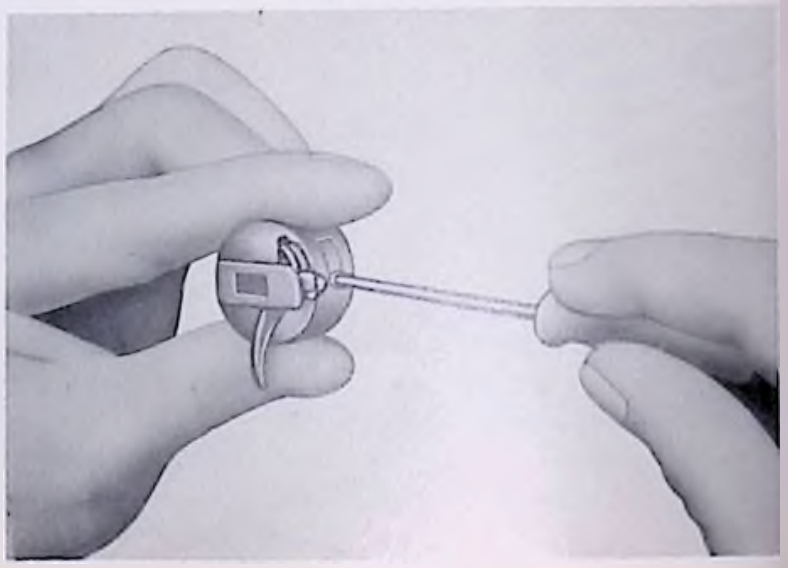

Fig

ADJUSTING PRESSURE AND FEEDING OF FABRIC

GENERAL SEWING. Usually for straight sewing and various embroidery work, the pressure bar cap or darning release (Fig. 19) is at its lowest position and the feed at its highest level-with the drop feed button marked UP pressed all the way down. (Fig. 18)

SEWING THIN OR LIGHT WEIGHT FABRICS

When lighter pressure is required to sew satisfactorily on thin silk or flimsy material, the pressure cap should be about halfway down. Release all the way by pressing the snap lock (A, Fig. 20) and then press cap B down again to half-way spot. Lower the feed slightly by pressing the DOWN button (Fig. 18) to the red line.

Fig. 18

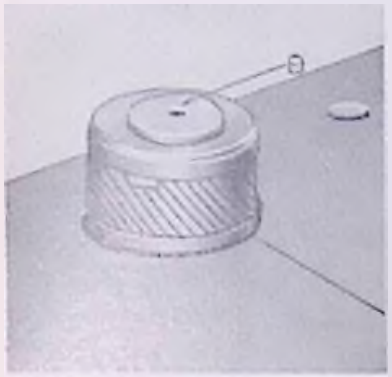

Fig. 19

DARNING AND MENDING

In order to move the fabric freely in any direction for darning and mending, release the pressure cap B completely by pressing down on the snap lock (A, Fig. 20). Press DOWN button (Fig. 18) all the way down, which drops the feed well below the needle plate. To return feed to normal, press the UP button all the way down.

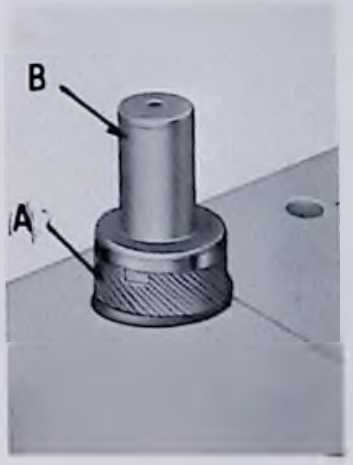

Fig. 20

PREPARING TO SEW

Have take-up lever at highest point before starting to sew. Do not try to help the feeding by pulling the material as this may deflect the needle and cause it to break.

NEVER run machine without material under presser foot.

Place material and threads in position under the presser foot and lower the presser foot. You are now ready to begin sewing. By having the needle at its highest point, it is not necessary to touch the hand wheel to start the machine. You merely press the control. The speed of the machine is regulated by increasing or decreasing the amount of pressure exerted on the control.

REMOVING THE WORK

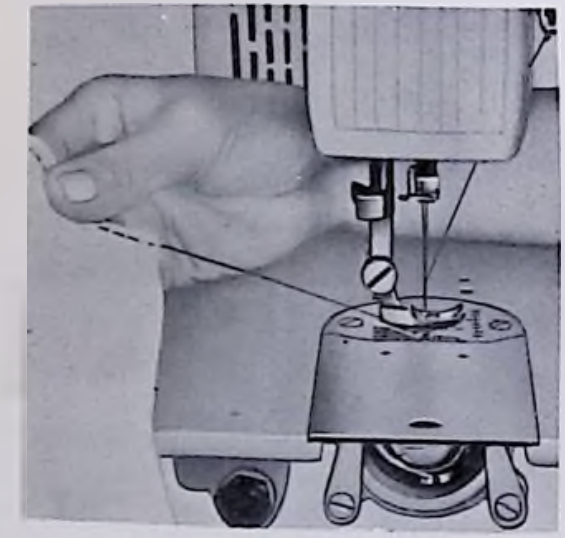

Fig. 21-A

Be sure to stop the machine when the thread take-up lever and needle bar are at the highest position.

Now raise the presser foot and draw the fabric back and to the left (Fig. 21 A,B) and pass the threads over the thread cutter.

Pull down slightly, holding thread in both hands, so as not to bend the needle.

Leave the ends of thread under the presser foot.

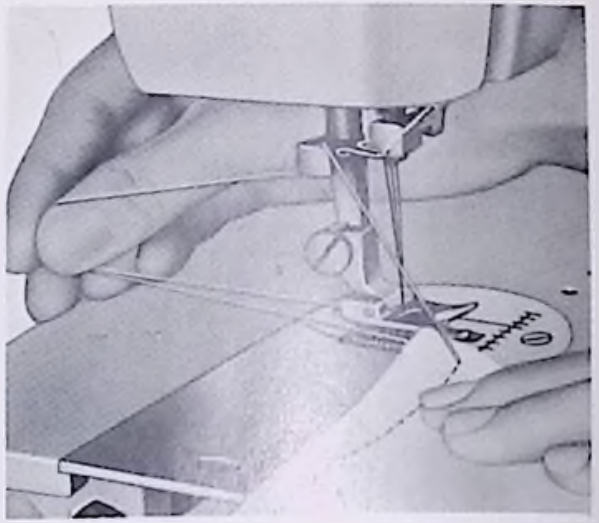

STRAIGHT STITCHING

For straight sewing on fine fabric or very soft material, you may want to use the straight stitch presser foot and the straight stitch needle plate which are included in your accessory box. Both have narrow needle slots.

Changing the Presser Foot and Needle Plate:

(1) Presser Foot
- (A) Loosen thumb screw (18, Fig. 1) and remove zigzag presser foot.
- (B) Replace with straight stitch presser foot (Fig. 22-A)

(2) Needle Plate
- (A) Slide cover plate (16, Fig. 1) to the left as far as possible.
- (B) Remove screws holding needle plate (15, Fig. 1) to bed plate.
- (C) Remove zigzag needle plate.
- (D) Replace with straight stitch needle plate (Fig. 22-B)

Be sure to set the stitch width at 0 or the needle will break in striking the foot or plate.

Grasp outer rim of zigzag dial A, Fig. 23, and press [illegible] lock B. Turn dial as far to the left as possible. [illegible] will then be on the zero mark.

Fig. 22-A

Fig. 22-B

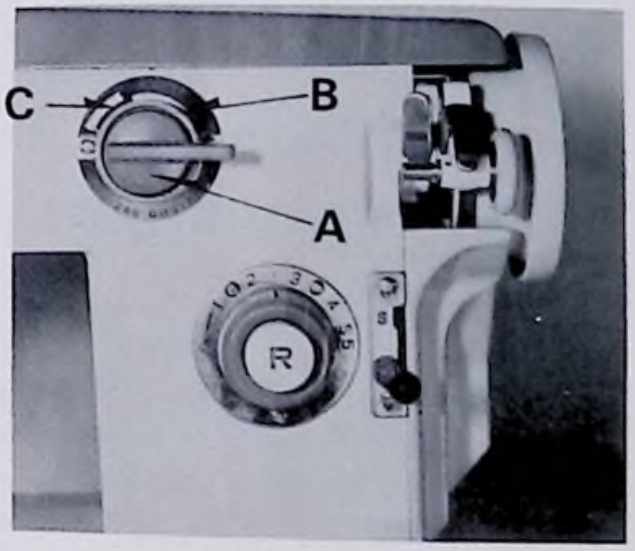

Fig. 23

CREATIVE EMBROIDERY

Be sure zigzag presser foot and zigzag needle plate are in place.

The satin stitch (Fig. 24) which is really just a very short zigzag stitch and the basis for most embroidery, is obtained by setting stitch length control (see page 9) as near 0 as possible without stopping the feeding action and zigzag width at, 5, (Fig. 23).

To stitch continuously at one width of zigzag stitching, set zigzag width stop (B, Fig. 23) to chosen stitch width number.

With the machine set for a short stitch length, different designs can be made by turning the zigzag width control knob back and forth between 0 and 5 or any other combination of widths. Try setting the stop (B, Fig. 23) at 1 and various other numbers.

Set a rhythm for yourself and then proceed. After a while you will become quite skillful, varying your designs by the speed of the machine, stitch length, and manipulation of the zigzag control knob.

Fig. 24

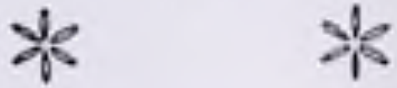

Fig. 25

SAMPLES OF CREATIVE EMBROIDERY

A. Sew a few stitches at 5 width, then allow knob to spring back to 0 for a short period. Count, if necessary, to establish a rhythm.

B. Set stop at 2 then move knob slowly back and forth between numbers 2 and 5.

C. Set stop at 1. Gradually move knob from 1 to 5, allowing it to snap back quickly.

D. Set zigzag stitch width stop at 4, stitch length at 1½. Do a few zigzag stitches, drop feed for 3 or 4 stitches, then raise it again. By operating the feed knob rhythmically it is not necessary to count stitches.

E. Drop feed, set stitch width lock at 5, take 3 or 4 stitches, leave needle in fabric left of stitches. Pivot fabric on needle to make next daisy petal. Continue until flower design is complete. Lock threads by setting stitch width at 0 and taking 3 or 4 stitches in center of design.

EMBROIDERING WITH A HOOP

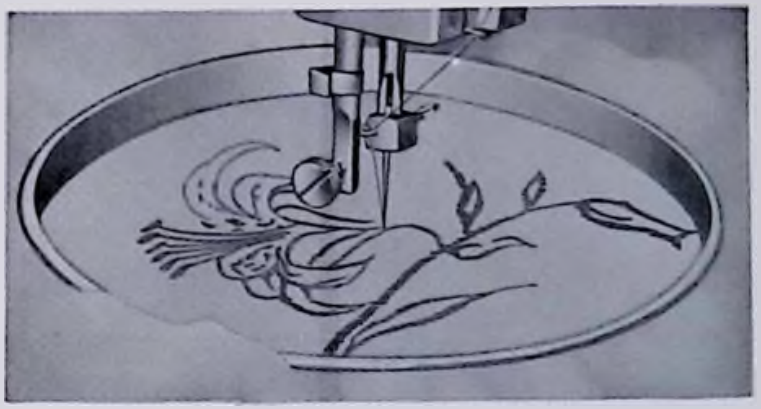

Fig. 26

It is easy to follow a stamped design or to work free hand when embroidering or monograming. (See Fig. 26). Release the pressure from the foot by pressing down on the snap lock ring darner. Push the drop feed button down all the way.

Stretch the fabric in an embroidery hoop, and place under the needle after removing the presser foot. Set the stitch width at the size you prefer and lower the presser bar lifter. Then operate the machine at a rather high speed while moving the hoop slowy with both hands. Work carefully and be sure to keep fingers out of the path of the needle.

Should you encounter skip stitches, the fabric is not stretched tight enough or a darning spring is needed (see attachments available from your dealer illustrated in the back of this book).

DARN OR MONOGRAM WITHOUT HOOP

If you wish to darn or monogram without embroidery hoop, leave zigzag presser foot in place, release all pressure on presser foot, set stitch length at 0, set zigzag stitch width to suit, and leave feed in sewing position.

When darning or monograming in this manner, the fabric must be held taut or skipped stitches will be encountered.

MAKING BUTTONHOLES

Fig. 27

First, mark the beginning and end of the buttonhole on fabric with a basting line or tailor's chalk. Make one on scrap fabric (following directions below) to be sure machine adjustments are correct.

1. Replace presser foot with buttonhole foot (Item 10, Fig. 41) which is grooved deeply underneath to prevent piling up of thread. (See Fig. 27).
2. Set stitch width at 2½ and stitch length knob near 0.
3. Lower needle carefully into the mark on fabric indicating the beginning of buttonhole. Stitch to the mark for the end of the button hole, step 1, Fig. 28, stopping machine with needle in fabric at right side of stitching.
4. Lift the presser foot and using the needle as a pivot, turn the fabric end for end.
5. Lower presser foot and turn hand wheel just enough to raise needle out of fabric.
6. Push drop feed button all the way down and turn zigzag stitch width knob as far to the right as possible and hold. Take five or six stitches to form bar tack (Step 2, Fig. 28).
7. Raise needle out of fabric, allow stitch width knob to spring back to stop and return feed to up position.
8. Stitch second side of buttonhole, Step 3.
9. Stitch bar tack by repeating 5 and 6 above (step 4).
10. Return stitch width to 0 and take two or three stitches to fasten bar threads and prevent ravelling. Cut the buttonhole opening with the seam ripper, being careful not to cut the stitching.

Fig. 28

If you plan to make buttonholes on sheer or soft material, place tarlatan or paper under fabric which can be torn away after stitching.

SEWING ON BUTTONS

1. Remove hinged presser foot and attach button sewing foot. See Fig. 29.
2. Push drop feed button "DOWN" all the way. Fig. 33.
3. Set zigzag stitch width stop at 0. Place the button so that its left hole comes directly under the needle, then gently lower the presser foot. Fig. 30.
4. Move zigzag stitch width stop until the needle comes down exactly over the right hand hole in the button. Fig. 31. Turn the hand wheel slowly by hand to be sure the needle enters both holes in button without deflecting needle, correct width if necessary.
5. When needle goes into the center of each hole, run the machine at medium speed, making six or eight stitches, stopping with the needle in the left hole.
6. To lock the zigzag stitch and prevent ravelling, set the stitch width at 0, and take a few stitches in the same hole. If you wish you may place a rounded toothpick over the button, between the two holes, and sew button to fabric in regular way.

   Remove the toothpick and wind thread under the button, forming a shank to fasten.

Apply the above method to sew on buttons with four holes, hooks and [illegible], etc. If a four hole button is to be sewn, follow the [illegible] procedure above for the two hole button.

Now [illegible] foot slightly and move fabric to permit stitching [illegible] two holes. Hooks, snaps, etc., are sewn to the [illegible] the same procedure as for sewing two hole buttons.

Fig. 29

Fig. 30

Fig. 31

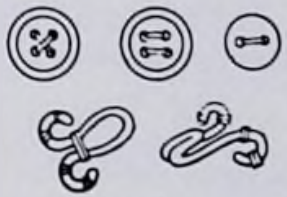

Fig. 32

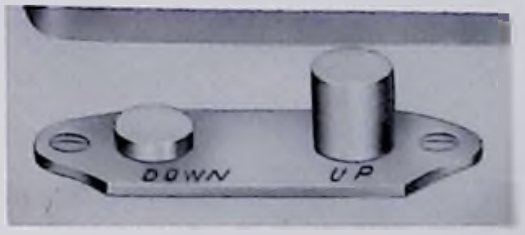

Fig. 33

STRETCH STITCHING

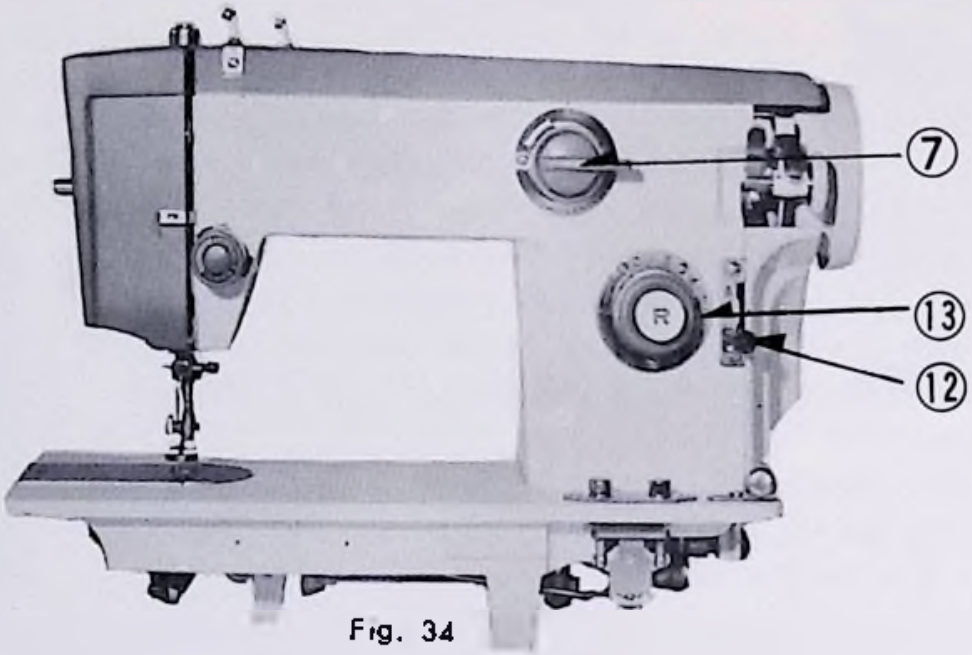

Fig. 34

To sew a reinforce seam that will stretch considerably more than the fabric used.

Set stretch control (12 Fig.-34) at the "S" position, the zigzag width control (7) at "0" and stitch length control (13) at the longest stitch possible (Number 5).

The stretch stitch control 12 controls both the forward and reverse stitch length if the stitch length control 12 is not set at number 5 the machine will be noisy and the material may feed in reverse.

A reinforce seam that will stretch is the most wanted feature in a sewing machine today.

Its uses are almost unlimited and the more you use your machine the more it will become apparent to you.

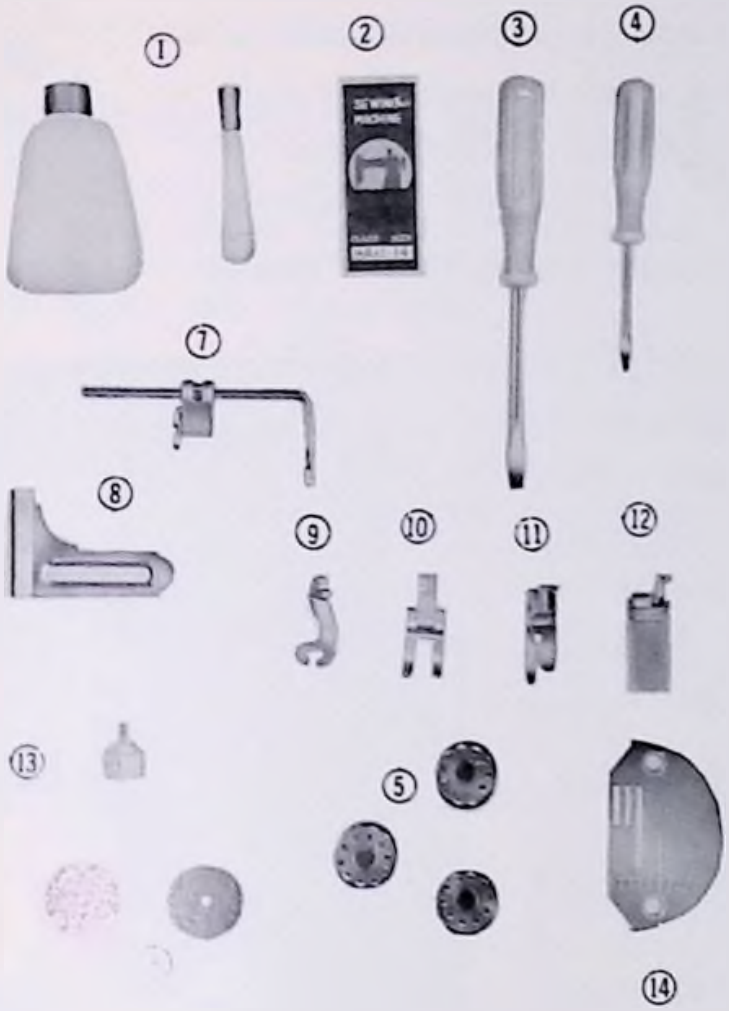

ACCESSORIES

1. Plastic Oiler (Sealed and Filled)
2. Package of Needles (5)
3. Large Screw Driver
4. Small Screw Driver
5. Bobbins (3)
6. Felt Washers (2) (for spool pins)
7. Quilter Guide
8. Cloth Guide
9. Button Sewing Foot Fig. 29
10. Prong Type Buttonhole Foot
11. Presser Foot for Straight Sewing
12. Narrow Hemmer
13. Thumb Screw
14. Needle Plate for Straight Sewing (graduated)

HOW TO USE ACCESSORIES

Fig. 35

Narrow Hemmer: With needle at its highest position replace regular presser foot with narrow hemmer (Fig. 35) being sure to tighten it securely in place. Set needle position lever at "L" position, pattern selector lever at "M" position and zigzag stitch width control at 0 for straight stitched hem or at number 3 for zigzag stitched hem. Set stitch length control to suit.

For a plain narrow hem make a ⅛ inch double fold for about two inches along edge of fabric. Hold each end of the two inch fold, slip underneath hemmer. Bring fold up into the scroll of hemmer, draw fabric forward to end and fasten with point of needle. Lower presser bar lifter. Gently pull end of thread as you start stitching (Fig. 36 for straight stitched hem and Fig. 37 for zigzag stitched hem).

Fig. 36

Fig. 37

Guide material slightly to left and it will take a double turn through scroll.

The narrow hem provides an excellent finish for edges of ruffles or any other dainty work.

LACE TRIMMED HEM

To sew a narrow hem and attach lace in one stitching, insert lace in the slot next to needle (Fig. 38) sew hem as above, guiding lace under needle and hem into scroll. Rickrack may be used in the same way.

Fig. 38

LACE EDGE WITH INVISIBLE STITCHING

Hold lace 1/8 inch from raw edge on right hand side of fabric. Insert both in scroll as for plain narrow hem (Fig. 39) let hem roll over and sew in lace. When the stitching is completed the hem is pressed on the wrong side.

Fig. 39

FRENCH SEAM

Place material with right sides facing each other and the top piece of material 1/8 inch from right hand edge of lower piece. Insert in hemmer scroll allowing hem to roll over and sew in top fabric making French seam. For cording effect, use zigzag stitch wide enough to catch both edges of the narrow rolled hem and sew with satin stitch. This can be used for covering chairs and so forth. (Fig 40)

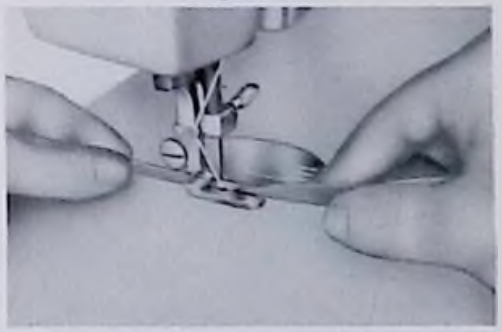

Fig. 40

41

HEMMING ACROSS A SEAM

To hem across a seam, cut the seam folds at an angle so they will lead into the hemmer gradually. Press seam open. Stitch across the seam at the extreme edge to hold it together and for added firmness. It may be necessary to pull the material slightly when hemming over the seam. (Fig. 41)

QUILTING GUIDE

Use this guide for making parallel rows of straight or decorative stitching. Attach standard presser foot. Slip U shaped holder on guide under presser foot thumb screw from the back and tighten screw (Fig. 42). Adjust the curved bar for the distance desired between rows of stitches and set so it presses slightly on the fabric. By letting the guide ride on the previous stitching line, successive rows will be at equal distance apart. (Fig. 45).

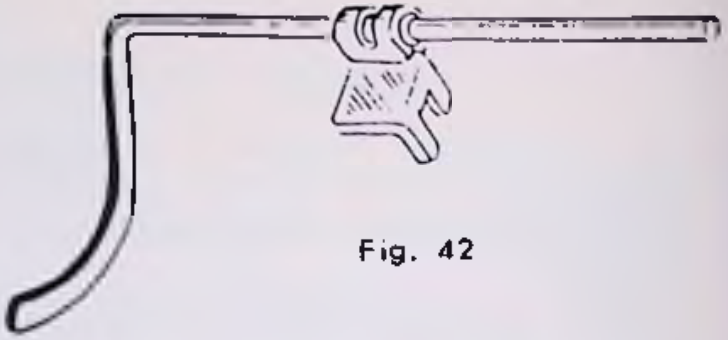

Fig. 42

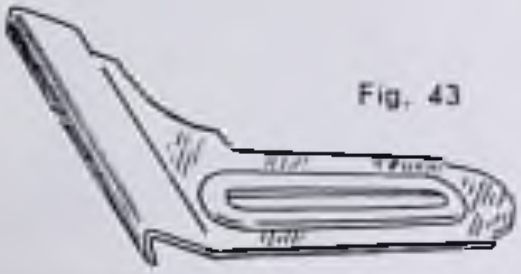

Fig. 43

Fig. 44

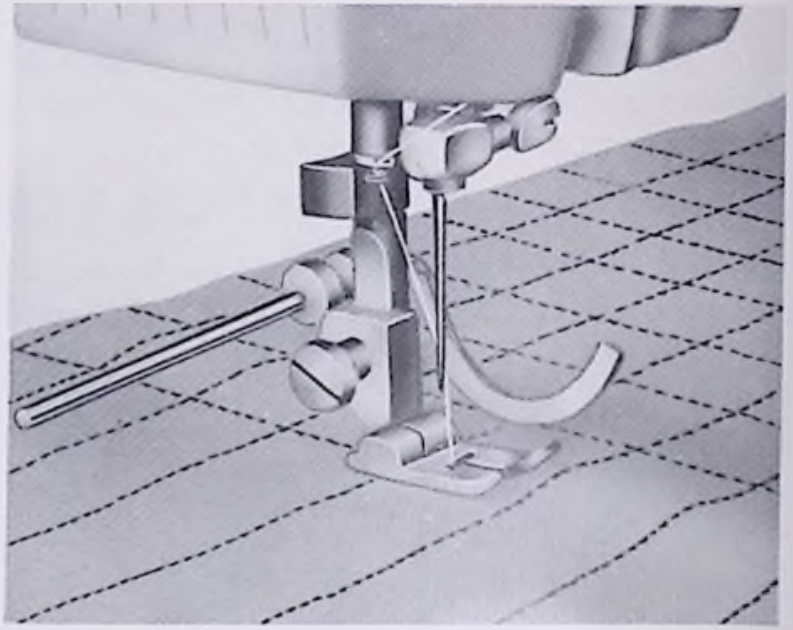

Fig. 45

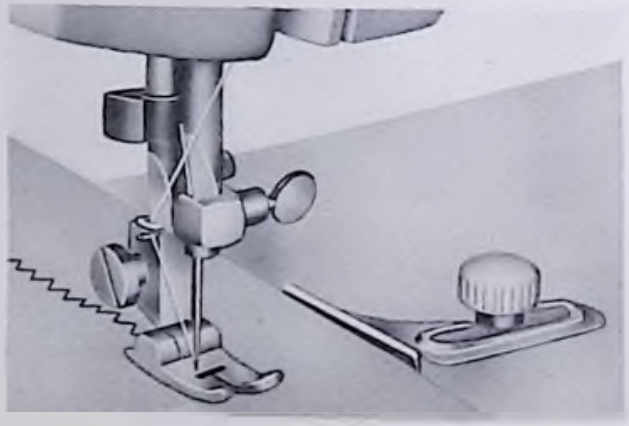

Fig. 46

SEAM GAUGE OR CLOTH GUIDE

Use the seam gauge as a guide for [illegible]ght seams and even rows of top stitching along [illegible] of fabric. (Fig. 46)

Fasten Gauge (Fig. 43) with acco[illegible]ng screw (Fig. 44) in threaded hole in bed of m[illegible] Adjust to desired width.

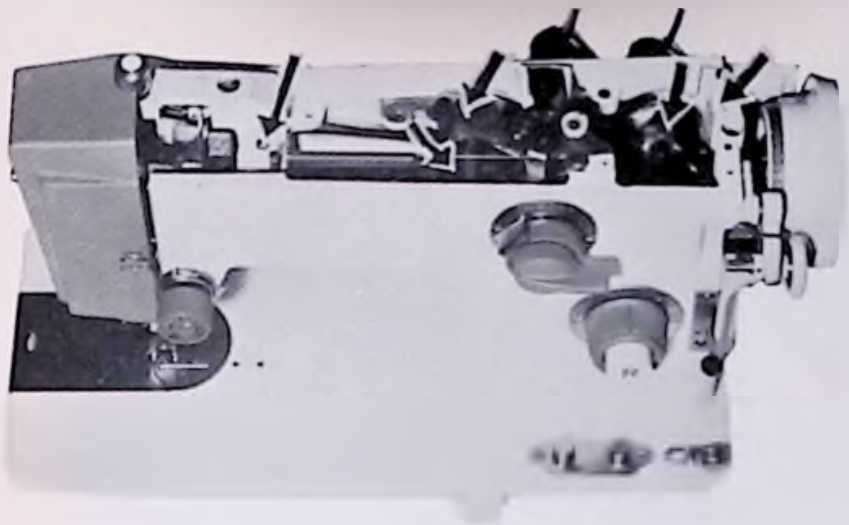

Fig. 47

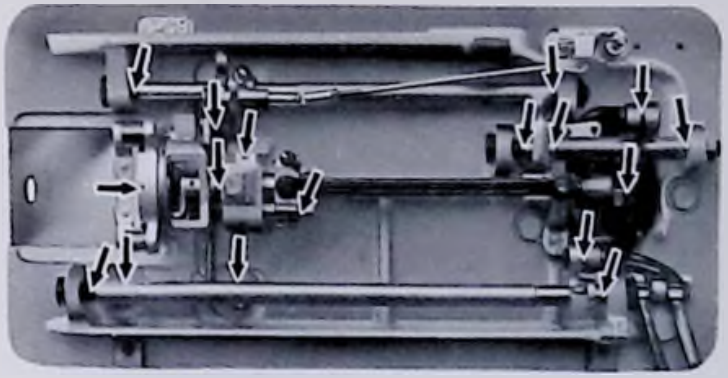

Fig. 48

CARE AND MAINTENANCE OF YOUR MACHINE

HOW TO OIL YOUR MACHINE

Use only a good sewing machine oil, do not use any common household oils.

Your machine should be oiled occasionally to keep it operating smoothly. How often depends on the amount of sewing you do.

Once a year oil your machine thoroughly as indicated by the arrows in Fig. 47, 48 and 49.

Avoid overoiling.

Fig. 49

CLEANING AND OILING THE SHUTTLE

(See Fig. 50 and 51)

The stitch forming mechanism occasionally becomes clogged with loose threads and lint. This will interfere with the efficient operation of the machine. Cleaning and removal of the lint will safeguard the performance.

To remove the shuttle assembly, proceed as follows:

1. Turn the balance wheel until the needle reaches its highest position. Tilt head back on its hinges.
2. Remove bobbin case.
3. Turn the two shuttle race cover clamps (B) outward and remove the shuttle race cover (C) and the shuttle body (D).
4. Clean the shuttle race, the shuttle, and shuttle race cover by removing all threads, lint, etc.

When the cleaning has been completed, proceed as follows to replace the shuttle assembly:

1. Turn the balance wheel until the needle reaches its highest position.
2. Place shuttle body, (D), in race against shuttle driver and adjust into position.
3. Replace shuttle race cover, (C), fitting pin at lower edge into notch, and lock into position with shuttle race cover clamps, (B), making certain the clamps have been snapped securely into position.
4. Put bobbin into bobbin case.
5. Put the bobbin case into the shuttle, fitting tongue into notch E of race cover.

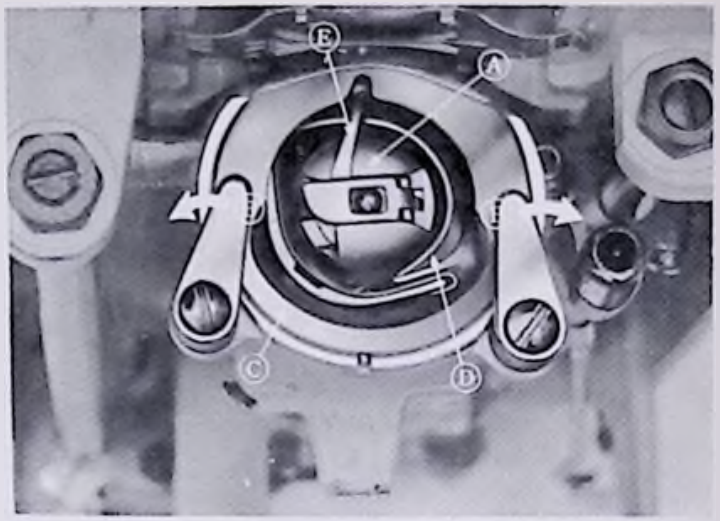

Fig. 50

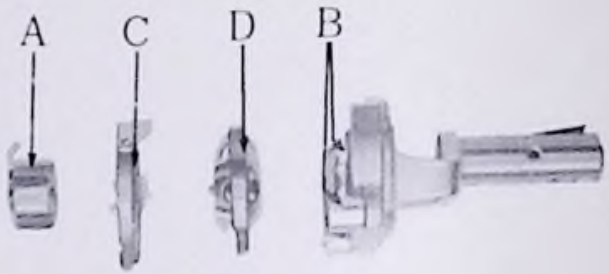

Fig. 51

ADJUSTING AND CHANGING "V" BELT

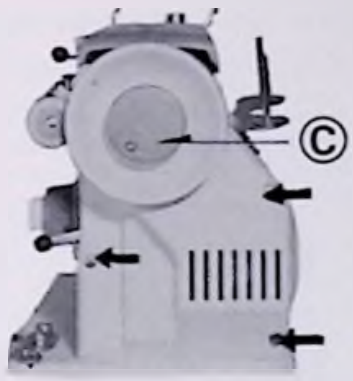

Fig. 53

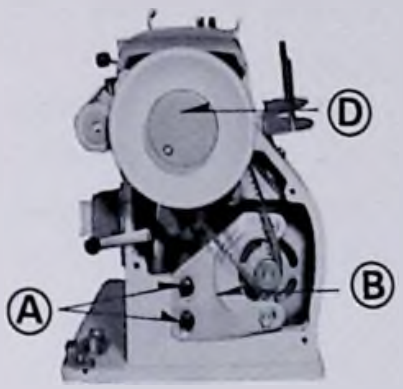

Fig. 54

Following are the instructions for adjusting and changing the "V" belt:

(1) Remove three screws holding rear cover (Fig. 53) by tipping it out at the bottom and pivoting around the hand wheel away from the front of the machine.

(2) To adjust "V" belt, loosen screws (A, Fig. 54,) and move bracket B up to loosen belt and down to tighten.

(3) To remove "V" belt:

- (A) Remove top cover.
- (B) Loosen clutch (C, Fig. 53).
- (C) Loosen screws "A" (Fig. 54) and move bracket "B" to its highest position.
- (D) Slip belt off motor pulley and then over hand wheel.
- (E) Replace "V" belt by slipping it over hand wheel and then over motor pulley.
- (F) Adjust as stated under No. 4.

TROUBLE CHART

Trouble	Probable Cause	Correction
If Machine Binds	Thread or lint in raceway	1—With take up lever in highest position, tilt head back on hinges and remove bobbin case. 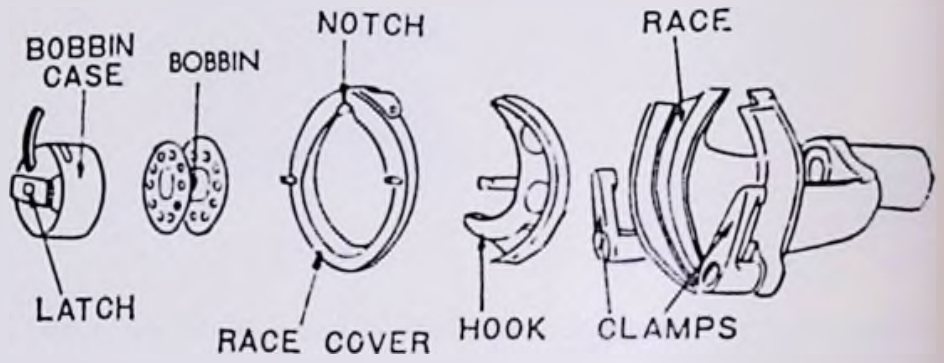 2—Turn clamps outward and remove race cover. 3—Remove hook. 4—Clean thread and lint from all parts, including race. 5—Run a drop of oil along rim of hook. 6—Replace hook, then race cover and clamps into place. 7—Grasp threaded bobbin case by [illegible] and replace, fitting tonque into notch [illegible] cover.

Trouble	Probable Cause	Correction
Skipping Stitches	Bent needle	Discard and replace.
	Needle placed incorrectly in clamp	See instruction, page No. 6.
	Too fine a needle for thread being used	See needle and thread chart, page No. 4.
Irregular Stitches	Upper thread tension too loose	Tighten upper tension..
	Improper threading	See threading instruction, page No. 8.
	Bobbin not wound evenly	Rewind bobbin.
Uneven Stitches	Pulling or holding material	Avoid pulling or holding material, just guide it.
	Not enough tension on upper thread	Increase tension.
	Poor quality thread	Try different thread.
	Needle too fine for thread being used	See needle and thread chart, page No. 4.

Trouble	Probable Cause	Correction
Upper Thread Breaking	Improperly threaded	Refer to threading instructions, see page No. 8, and rethread machine.
	Too much tension	Loosen tension on upper thread by turning thread tension knob to lower number.
	Starting with take-up in incorrect position	Always start sewing with take-up lever in highest position.
	Improper setting of needle	Refer to needle setting instruction, see page No. 6.
	Bent or eye of needle too sharp	Try a new needle.
	Bent or blunt needle	Discard all blunt or bent needles and replace with new.
Material Puckering	Tensions too tight	See tension adjustment, page No. 10.
	Dull needle	Change needle.
	Stitch length too long	Reduce stitch length.
Sewing Stretch Stitch	Machine noisy Material will not feed	Set stitch length control at Num

Your sewing machine comes equipped with the basic set of accessories described earlier in this book.

The following pages illustrate additional time saving attachments that have been designed specifically for your machine. They are available at modest cost from your dealer. If your dealer cannot supply you with these items, ask him to order them for you by part number. Then you will be assured of receiving the genuine part designed for best performance with your machine.

If a sewing machine dealer is not available mail your inquiry directly to:

WHITE SEWING MACHINE COMPANY
11750 BEREA ROAD
Cleveland, Ohio 44111

In Canada:

WHITE CONSOLIDATED INDUSTRIES, LTD.
1470 BIRCHMOUNT ROAD
SCARBOROUGH, ONTARIO, CANADA

SOME OF THE ATTACHMENTS AVAILABLE FOR YOUR MACHINE

PART #1403
Ruffler

PART #4990
Darning Spring

PART #1873
Cording & Zipper Foot

PART #82528
Attachment Foot

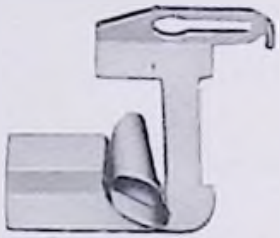

PART #74159
Binder

PART #76554
Edgestitcher

7/8
PART #76553

5/8
PART #76552

3/8
PART #76551

1/4
PART #76550

Fig. 55

EDGESTITCHER

The edgestitcher is used in making dainty lace insertions, edgings and piping.

The slots in the edgestitcher serve as guides in sewing together various pieces of material. If you want to sew lace, lace and embroidery, or lace and tucked strips together, place the piece of material that will be on top in slot 1 (Fig. 56) and the lower fabric in slot 4. For instance, if you are sewing lace edging to a finished edge of fabric, place the fabric in slot 1 and the lace in slot 4 (Fig. 57)

ATTACHMENTS

Be sure the needle positioning lever is in the extreme left hand position.

ATTACHMENT FOOT

In order to attach binder, edgestitcher and the hemmers, it is necessary to remove the presser foot and replace it with the attachment foot. (Fig. 55)

Mount binder, edgestitcher or hemmers by sliding the attachment to the left as far as possible and tightening the screw.

The mounting slot enables you to sew as close to or as far away from the edge as desired. Just move the attachment to the correct position before tightening the mounting screw.

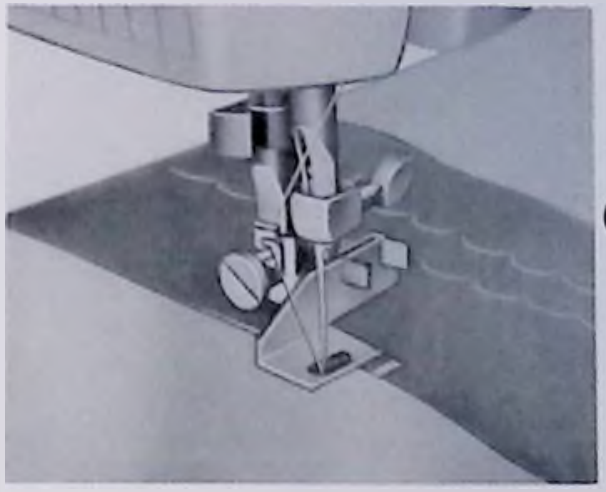

Fig. 56

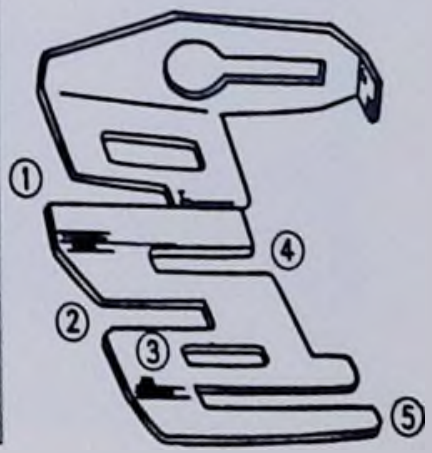

Fig. 57

Be sure to draw the lace and material under the needle and back of the edgestitcher so that the feed will carry it backward as you stitch. Hold the fabric in the left hand and the lace in the right, being sure the fabric overlaps the lace slightly.

Rick-rack can be sewn to the edge of the material in the same manner.

To trim with wide piping place the fabric in slot 4, and the fold of the piping to the left in slot 3, for a narrow piping place fabric in slot 2 and the folded edge of the piping to the right in slot 3.

Slot 5 may be used as a guide in stitching a French seam.

See Figs. 58, 59, 60, and 61 for suggestions on how to use the edgestitcher. There are hundreds of other uses.

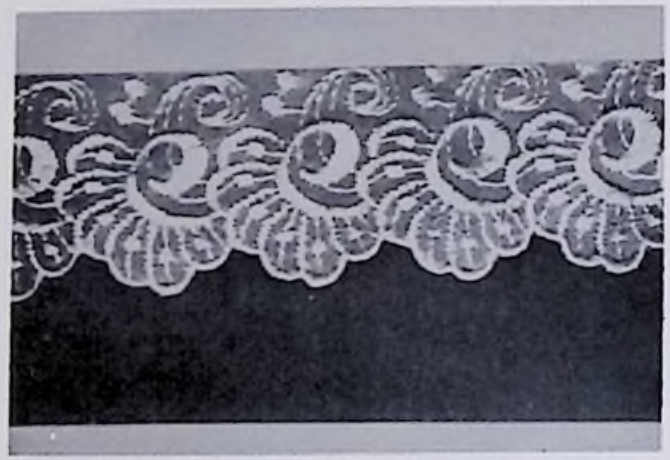

Fig. 58

Fig. 59

Fig. 60

Fig. 61

BINDER

This attachment folds bias binding and applies it to the edge of material in one operation. Slots on scroll of the binder are for corresponding widths of commercially folded bias binding. The open mouth of binder scroll is used for unfolded bias strips cut 15/16 inch wide.

FOLDED BINDING (Fig. 64)

Cut a point on folded binding, insert in appropriate slot. Draw through slot and under binder with strong pin. Test stitching to be sure it is on the edge. Adjust by sliding binder to right or left.

TWO-TONE BINDING (Fig. 65)

Two bindings can be sewn on fabric edge also in one operation. When two are used, always skip one size between widths, inserting each in correct size slot.

HAND-CUT BIAS BINDING (Fig. 64)

Cut 15/16 inch bias binding fold in half for a couple of inches. Cut binding diagonally toward end, almost to fold. Slip fold into center of binder. Draw back until cut opens and binding encircles open end of scroll. Test stitching to be sure it is on the edge, adjust if necessary.

Fig. 64

Fig. 65

Fig

Fig. 63

See Figs. 62 and 63 for suggestions on how to use the binder. There are hundreds of other uses.

THE SET OF HEMMERS

Before attaching any of the hemmers, be sure bobbin thread is pulled up. Then, with hemmer in place, hold top thread loosely and turn handwheel one full turn toward you, making a loop under hemmer. Grasp bobbin thread with both hands and slip horizontally under hemmer toward back. Bobbin thread will catch loop and carry upper thread to back of hemmer.

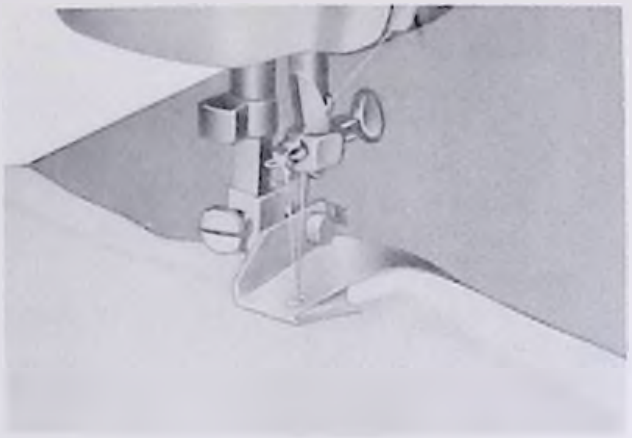

Fig. 66

Fold material to suit for two inches along edge, hold at each end of fold. Slip fold into guide and up over spoon (Fig. 66). Fold hem in material back of hemmer. Draw forward to end of hem and fasten with point of needle. Pull on threads gently as you start stitching.

HEMMER SET

You can make a hem 1/4", 3/8", 5/8" or 7/8" in width, depending upon which hemmer you use. For a few of the many uses see Figs. 67, 68, 69, 70, 71 and 72.

HEMMER SET

Fig. 67

Fig. 68

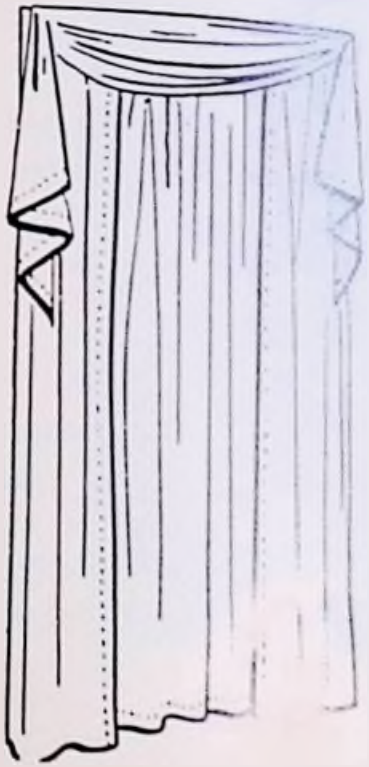

Fig. 69

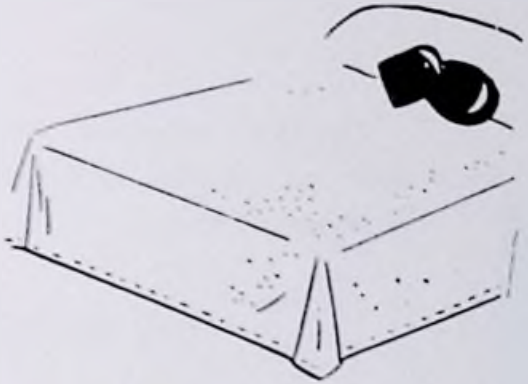

Fig. 70

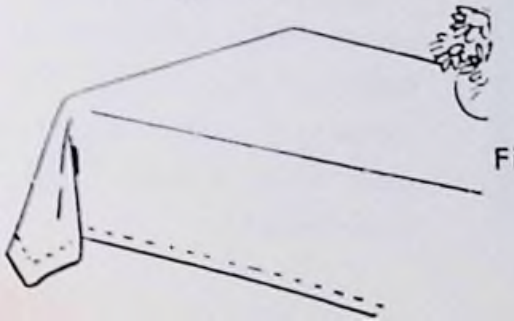

Fig. 71

Fig. 72

THE ADJUSTABLE CORDING AND ZIPPER FOOT

This attachment is used to make and insert covered cording, and to sew in zippers. Loosen thumb screw to slide foot to either right or left of needle.

CORDING. Fold bias strip of fabric over cord. Loosen thumb screw and set foot so needle is centered in needle hole. Machine baste cord in place (Fig. 73 ~ 74).

Fig. 73

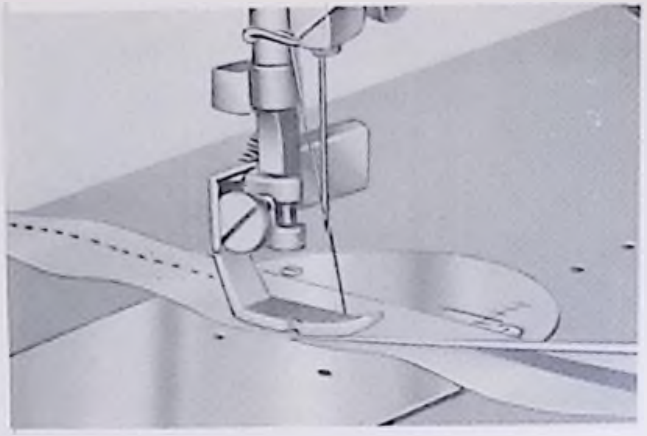

Fig. 74

To sew covered cord to material, reset adjustable foot so needle stitches closer to cord, and on edge of base fabric.

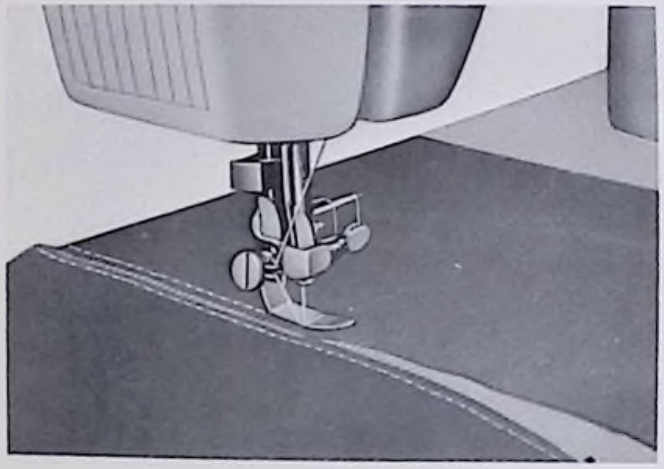

Fig. 75

SEWING IN ZIPPER

Loosen thumb screw and slide foot so needle enters center of needle hole. Guide metal of zipper along edge of foot (Fig. 75). Stitching should be close to zipper to allow easy opening and closing. Adjust to sew from either right or left side, whichever is more convenient.

ADJUSTABLE CORDING AND ZIPPER FOOT

Fig. 77

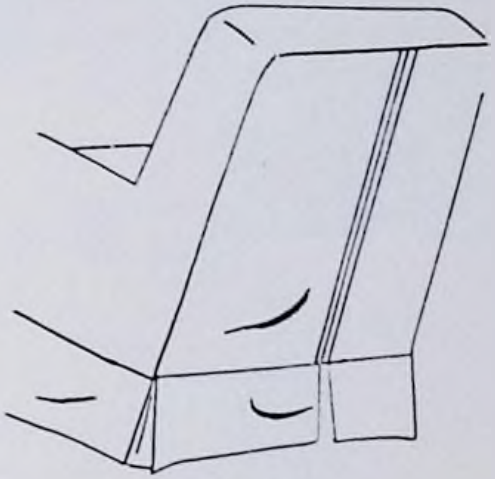

Fig. 78

RUFFLER

Fig. 79

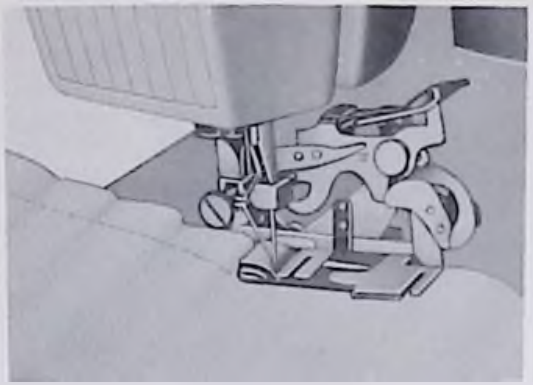

Fig. 80

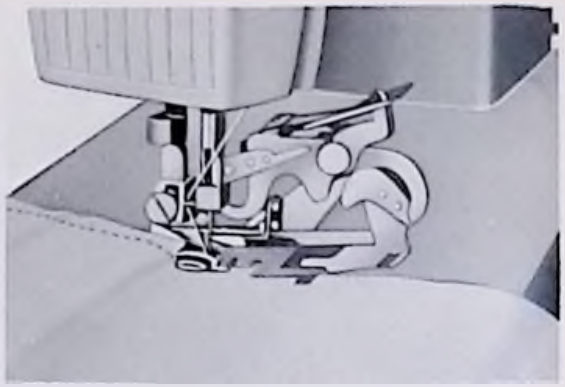

Fig. 81

The ruffler will produce yards of delicate ruffling or precision pleating.
Ruffling can also be done and sewn to another piece of fabric at the same time.
This highly versatile attachment despite its wide range of use, is simple to use.
Use the ruffler for making aprons, curtains, pleating a skirt, adding fullness to the bodice of a dress etc.

Fig. 79-A

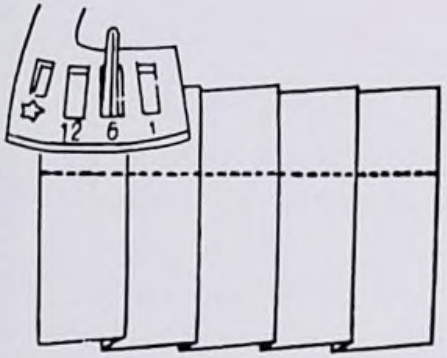

Fig. 80-A

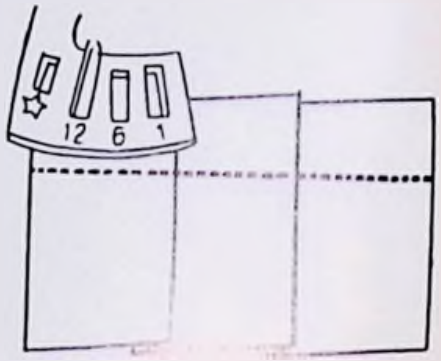

RUFFLER

Fig. 82

Fig. 83

Fig 86

Fig. 84

Fig. 85

SEWING TIPS

When a dainty hair line finish is particularly desirable for the inside seams of sheer collars, facings, and yokes, seam allowance that would ordinarily show through is eliminated by following the seam outline with a narrow zigzag stitch.

Trim seam allowance close to line of stitching. Turn and press.

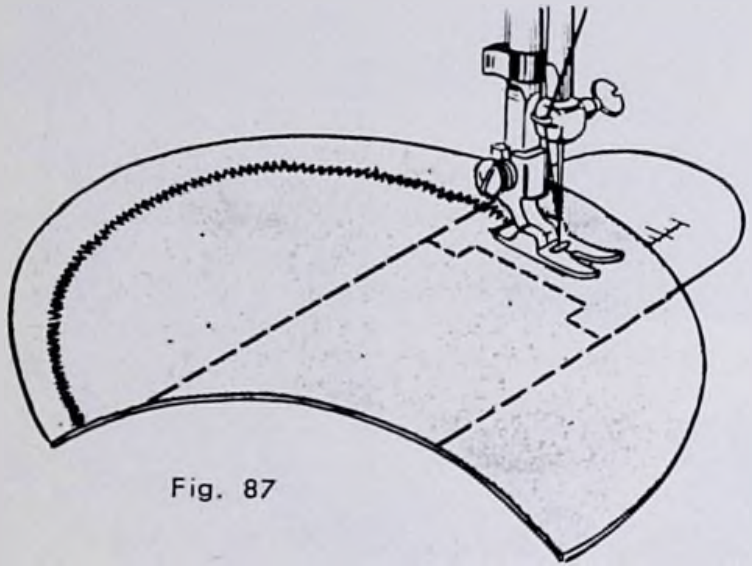

Fig. 87

Fig. 88

EVENLY SPACED BUTTONHOLES

To make a row of buttonholes evenly spaced and accurately stitched, draw the [illegible] for the buttonholes on one long strip of tissue paper. Pin this pattern to position on [illegible]ent with fabric strips under each marking. Stitch around the outlines then tear paper [illegible]

SHAPING DARTS IN INTERFACINGS

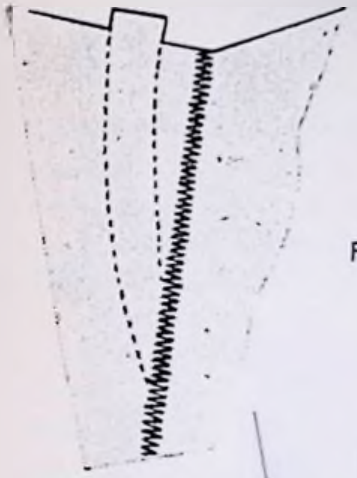

Fig. 89

3
½
Center

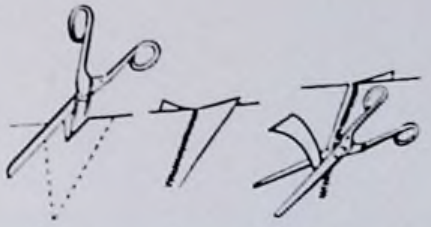

Fig. 90

Cut interfacing down center between dart lines. Overlap cut edges, matching dart lines. Zigzag stitch along marking line from point to wide end of dart. Trim both raw edges close to stitching.

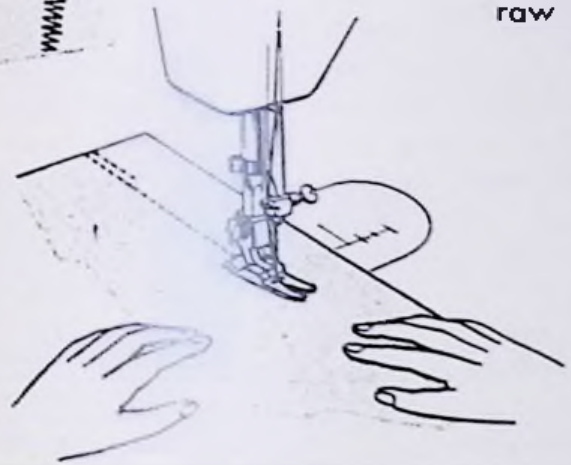

Fig. 91

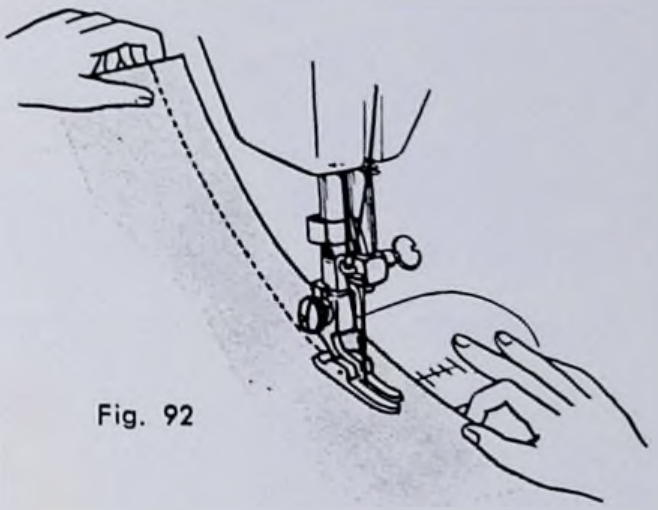

Fig. 92

SEWING ON SHEER MATERIALS

Most fabrics need to be guided only in front of the presser foot as shown at left. Many flimsy sheers, crepes, knits, tricots, etc., require support while being stitched. For such fabric use the straight stitch throat plate and presser foot and apply gentle tension by holding seam in front and back of the presser foot as shown at right.

OVERCASTING WORN EDGES

Zigzag stitch along the worn edges, catching the fabric as the needle swings to the left, and allowing the needle to just pass over the edge of the fabric on the right (Fig. 93).

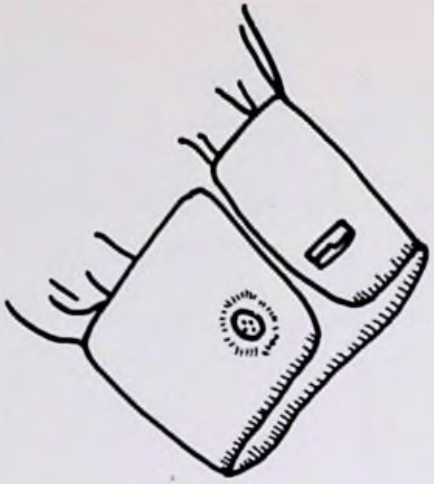

Fig. 93

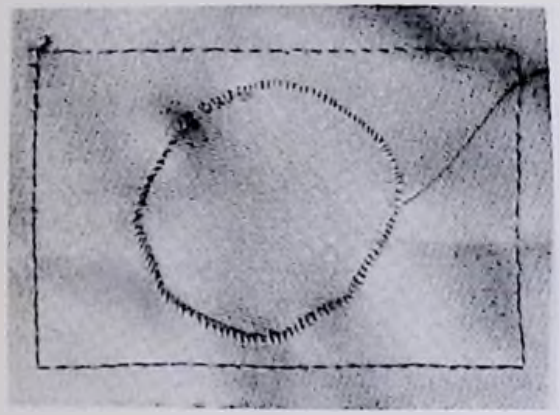

Fig. 94

PATCHING

Machine baste patch into place under hole or worn area which has been cut away. Then zigzag stitch the patch into place by overcasting around edge of hole (Fig. 94).

STRAIGHT OR THREE CORNERED TEAR

Zigzag stitch along a straight tear catching fabric on left and right side of tear by swing of needle. Be sure your tensions are not too tight or puckering will be encountered.

In mending a three cornered tear, start zigzag stitch from each end and work to center (Fig. 95).

Fig. 95

PLAIN BOUND BUTTONHOLE

Cut straight or bias strips of fabric 2" wide and 1" longer than the desired buttonholes. Place right sides together over positions for buttonholes. Mark exact length of each buttonhole in center of each strip place a pin through center of the marking. Begin to stitch at the pin; marking an oblong box ⅛" above and below the line ¼" across each end. Run a few stitches beyond starting point to reinforce. View 1.

Slash through the center line of the box to within ¼" of each end then diagonally into each corner, View 2. Turn the strip through the opening, press seams flat across the ends so the facing will not be visible from the right side. Fold the strip to meet in the center of the opening. Baste the folds together across the opening, View 3.

Turn garment back at each end and stitch across the strip, securing the triangular slashed section to the pleated strip and press, View 4. Bring facing of garment to position and baste around each buttonhole. Insert the point of a pin through each corner and slash through the center and into each corner pin. Turn under the raw edges and slip stitch the facing to the underside of the buttonhole, View 5. Press the finished buttonhole, View 6.

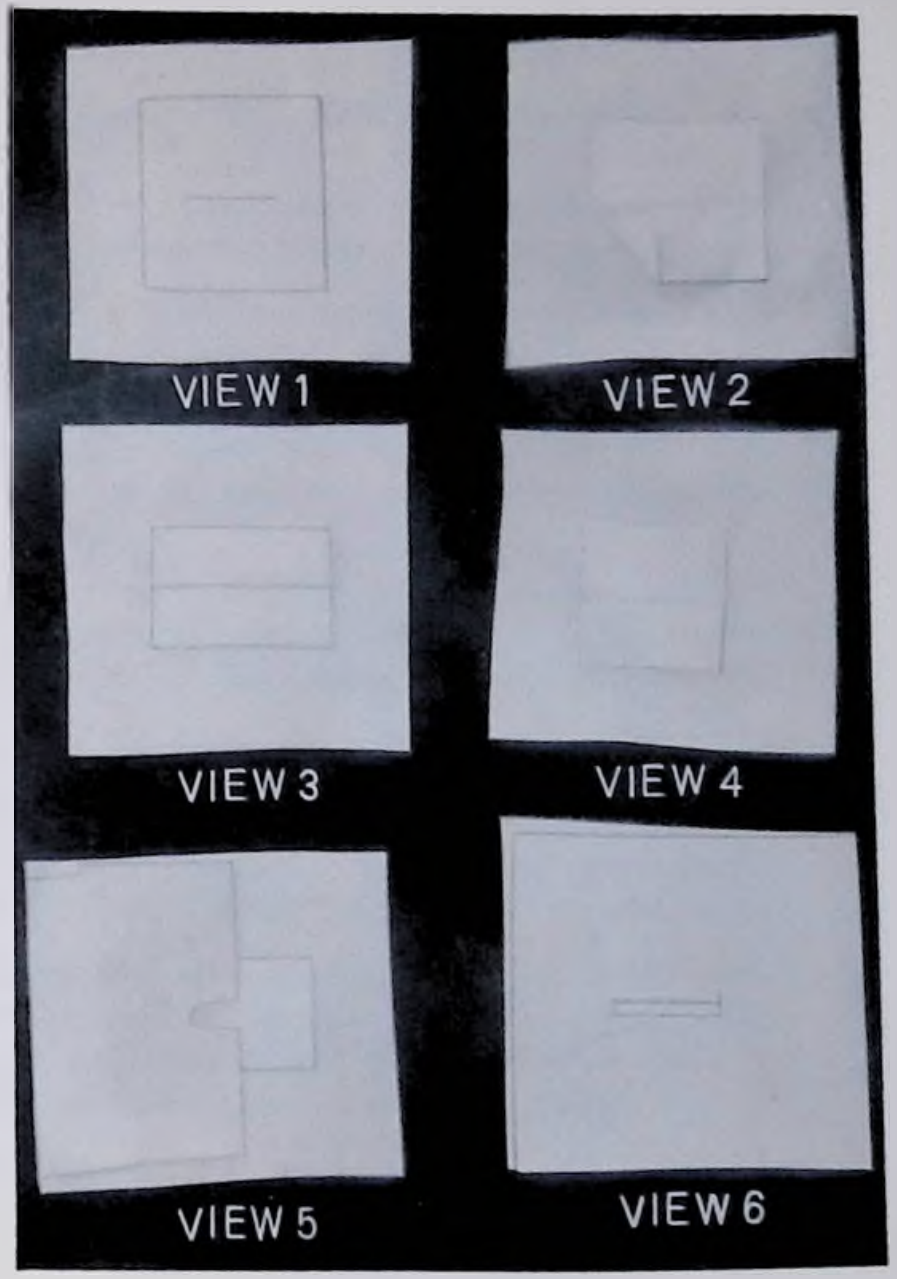

INSTALLING SEWING HEAD IN PORTABLE CASE

please read these important instructions which were written to aid you in placing your new sewing machins in its portable case.

First, remove the foot control which is fastened inside the base to avoid damage in shipping. After unpacking the sewing machine unit, being certain to take out the Instruction book, guarantee and accessory box, lay the unit face down on a table. You will see two clamping screws A entering head hinge holes B on the underside of the back.

On the base you will find two head hinges C which will fit into holes B. Lower the base onto the sewing machine fitting hinges C into holes B. Tighten screws A securely with a screw driver.

To make the electrical connection draw the two wires through the slot in the partition of the base. Plug the cord labeled "Motor" into the receptacle marked "Motor" on the block attached to the outer section of the base. Then insert the other cord into the "Light" receptacle.

Place the foot control on the floor, insert plug into a wall outlet (110-115 volts) and you are ready to sew. But first read the instruction book to become familiar with the threading of the machine, tension adjustments and all the other features designed to make sewing a pleasure.

See Fig. 96 and 97

MEMO

MEMO

TO OBTAIN THE BEST PERFORMANCE FROM YOUR MACHINE BE SURE THE CABINET, CARRYING CASE OR OTHER ITEMS USED WITH YOUR MACHINE ARE GENUINE WHITE PRODUCTS.

Printed in Japan